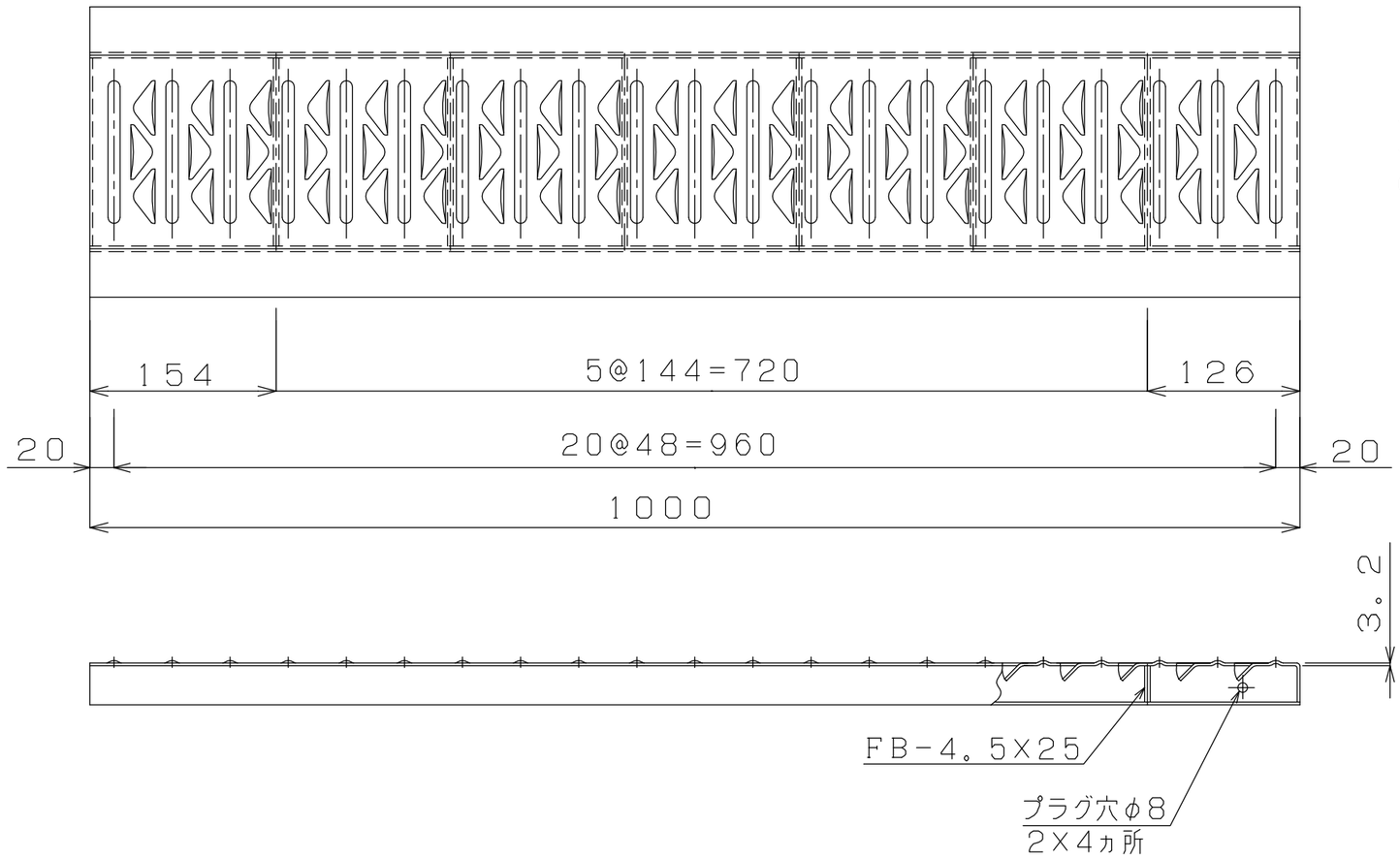

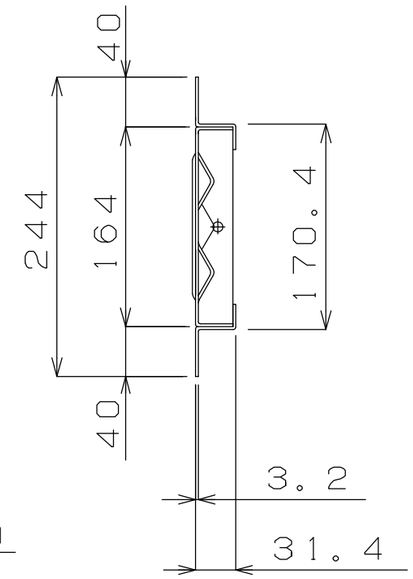

記事

1. 型　　式 : RB-18

2. 材　　質 : 亜鉛メッキ

3. 荷重条件 : T-2

APPROVED BY			WORK NO.
JUDGED BY			
ENG'R IN CHARGE		溝幅　180用	DRAWING NO.
CHECKED BY			
DRAWN BY			
DATE DRAWN			
SCALE		DAIKURE CO., LTD.	